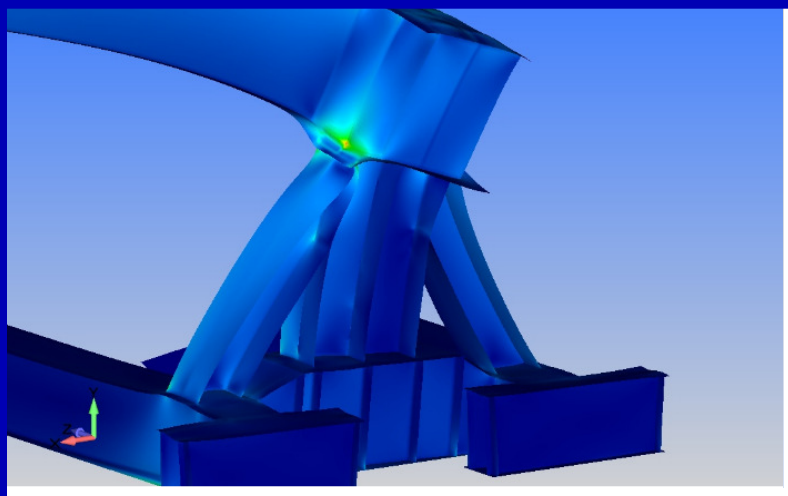

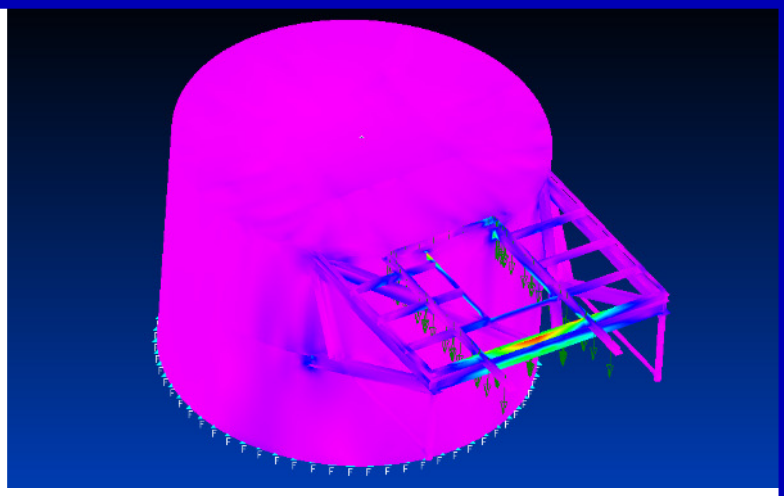

Picture book
Structural analyses and fatigue assessment

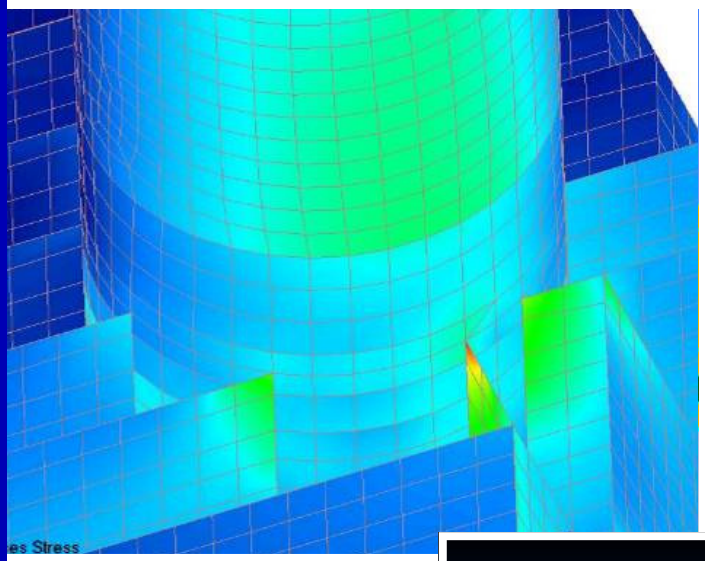

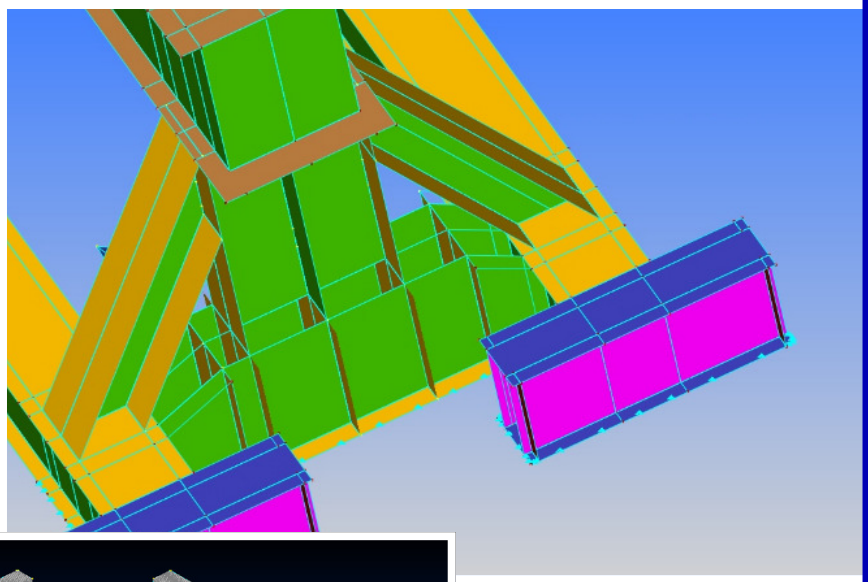

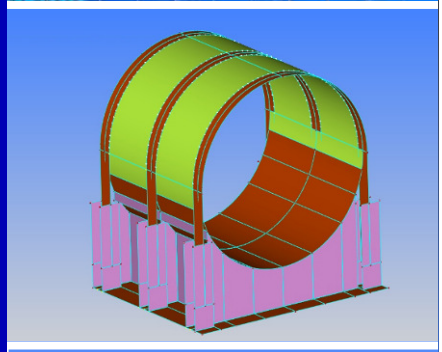

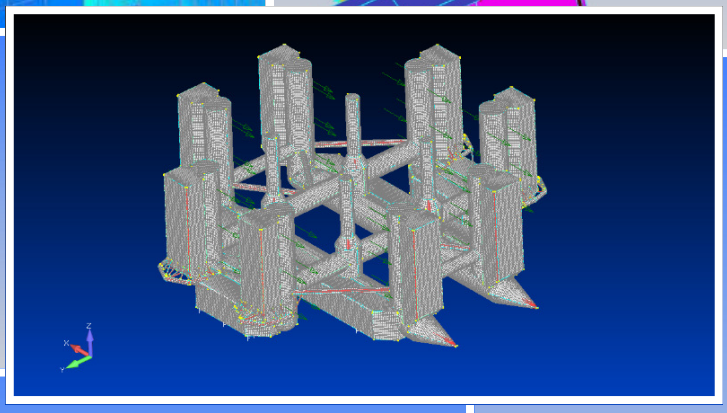

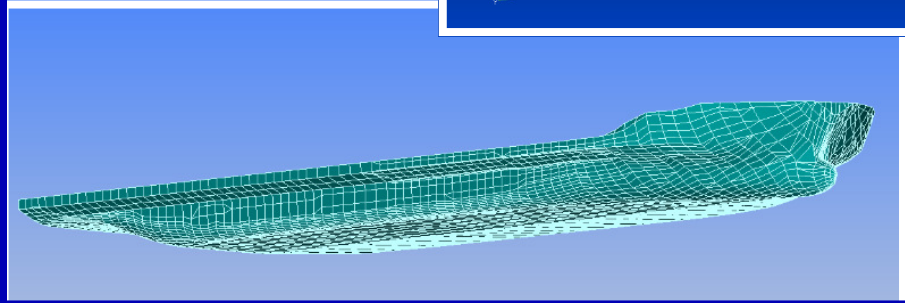

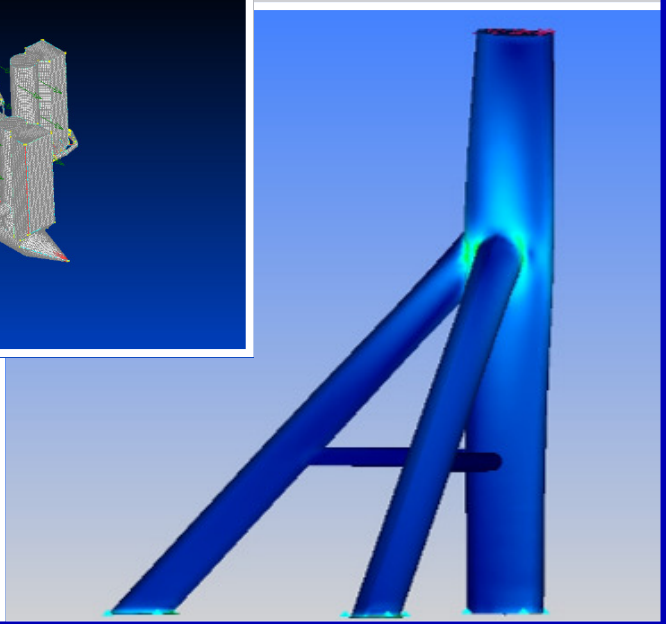

HMC (Hydrographic and Marine Consultants)

Dear reader,

Please let me introduce our company, HMC was founded in 1986.

The direction is in hands of Mr. (Ton) Bos who graduated from the Technical University Delft in the degree of Naval Architecture and Marine Engineering. As of 1978 Ton Bos was involved in towing, salvage and heavy transport when he joined the Wijsmuller Group of companies.

HMC (Head office Almere)

With kind regards,
A.J. Bos M.Sc.
MBA Eur. Ing.

Mr. C.B. van der Zwan is business partner and advisor to the HM-group. Mr. van der Zwan is former CEO of Dockwise and renown in the industry of salvage and heavy transport.

Structural analyses and fatigue assessment

This document gives examples of engineering projects were HMC used Finite Element Modeling And Postprocessing (FEMAP) for structural and fatigue analyses.

HMC (Hydrographic and Marine Consultants)

HMC is an independent engineering and consultancy organisation and offers transport and offshore installation engineering, fatigue analyses and is renowned supplier of ship loading instruments, safety systems, and hull monitoring systems.

Our services and products are geared towards improving the safety, quality and efficiency of maritime operations, improving economics of operations and supporting policy decisions.

The work of HMC is divided into three business units:

- Services Marine Services (MS)
- Products Maritime Business Applications (MBA)
- Education Maritime Education (ME)

Marine Services (MS)

Marine Services/ hydrography are geared towards the operational side of maritime-, offshore and shipboard projects. The marine services comprise:

- Hydrodynamics analyses
- Hydrostatic analyses including class approved stability books including strength
- Structural analyses
- Fatigue analyse
- Life time extension
- Engineering and supervision of heavy lift transportation's, special transport including tow outs of platforms and pipelines
- Condition surveys
- Supervision during construction works
- Implementation of Quality Assurance programs
- Hydrographic surveys and research programs

Maritime Business Applications (MBA)

Maritime Business Applications comprises the technologies: management science (among others operations research) and information technology, both directed to the maritime industry. The Maritime Business Applications comprise:

- Development of systems for: Fleet scheduling, Crew planning and Inventory control and planned maintenance.
- Class approved CPC Systems Cargo Planning & loading Computers
- Fleet automation
- Voyage calculation software
- Cost benefit analysis and deal evaluations
- Decision support and optimization systems
- Systems for transport engineering
- Transport and ship's hull-monitoring systems related to motions, loads strength and fatigue

Maritime Education (ME)

For the past 25 years, the previously mentioned MBA & MS activities of HMC have accumulated knowledge and skills over numerous projects by offering transport engineering solutions to their customers. To support industry wide innovation and safeguard the continuity and quality of education Maritime Education aims to share its knowledge-base with the industry and educational institutions via the following activities:

- On-site and in house company courses on transport engineering for your organisation
- Maritime and engineering (guest) lectures on schools and universities
- Open-admission courses on a variety of topics regarding transport engineering
- Re-training courses for nautical employees towards maritime engineering careers
- Course materials developed through 25 years of real-world experience

Please visit www.hmc.nl for more information.

INDEX

Marine Services (MS)

1. Examples of project performed

1.1 TPI Gorgon Mega Trust fenders

HMC ref: 10669

These three fenders (push pads) were placed on both sides of the heavy lift carrier Mega Trust for mooring and pushing purposes. The analysis consisted in verifying the maximum allowable force on the fenders.

Initially, the resulting stresses calculations using FEMAP proved the structure of the fender was not sufficient to withstand concentrated loads of 100 [t] applied via a common "truck" tire of 0.7 [m]. After modifications as per recommendations of HMC the resulting stress was satisfactory.

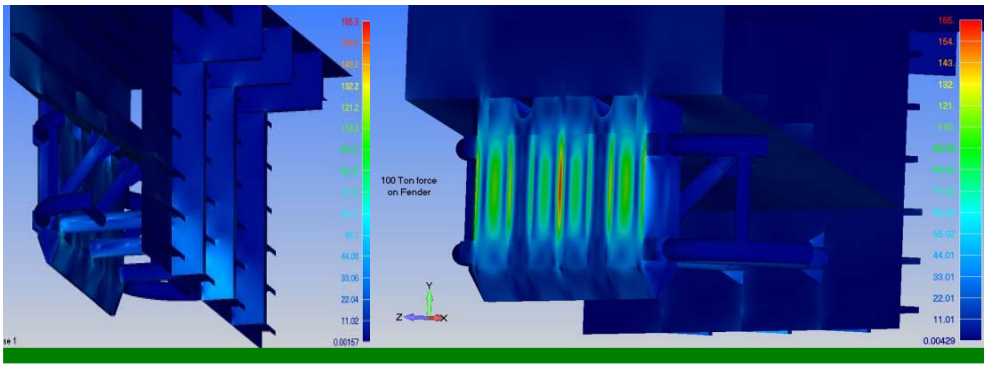

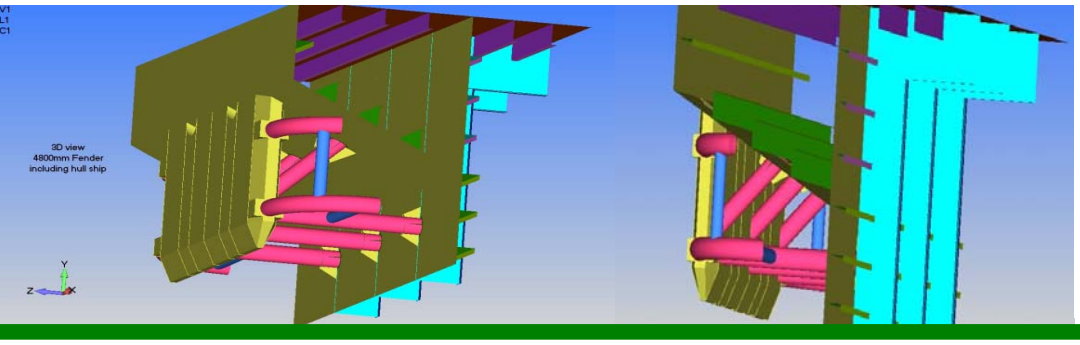

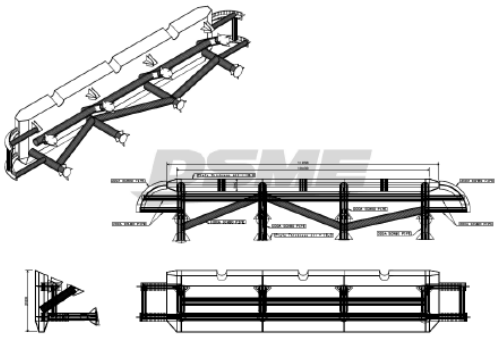

1.2 Guidepost for the Gavea Lifter

HMC ref: 11552

Guidepost for the loading operations onto the largest semi submersible barge in the world: the Gavea Lifter.

A FEM model of the guidepost was made to check the design. A force of 20 [t] was used in the calculation. The calculation results show the von misses stresses values are within the permissible range according the rules.

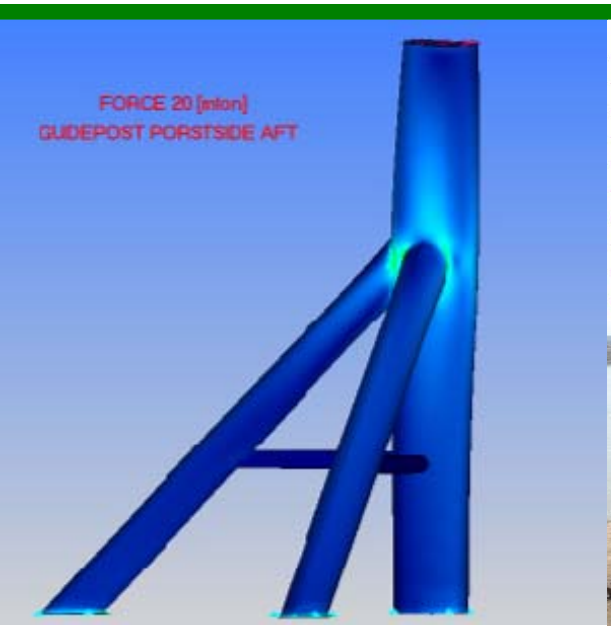

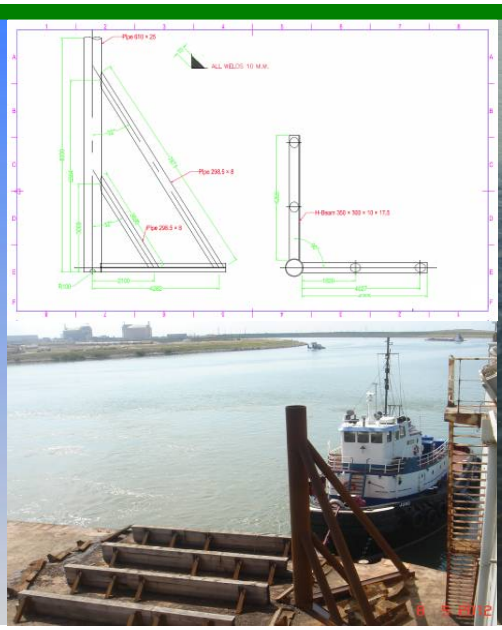

Finite element on gas compression modules

HMC ref: 11554

Gas compression modules were installed on Jack-Up barges operating in Kazakhstan. The modules comprised 1846 pipe supports that are exposed to forces resulting from environmental conditions and operational conditions including temperature gradients.

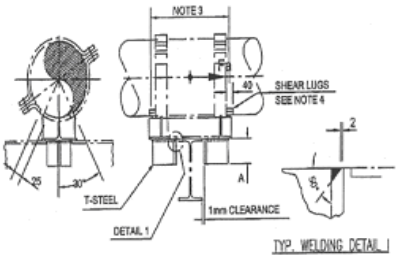

NPS		DIMENSIONS IN mm		WEIGHT	Fa MAX.
INCH	mm	T-STEEL SIZE	A	KG	kN
2"	050	T 50.50.6	50	0,2	40
3"	080	T 50.50.6	50	0,2	40
4"	100	T 50.50.6	50	0,2	40
5"	125	T 80.80.9	50	0,5	64
6"	150	T 80.80.9	100	1,0	64

FOR 8" AND ABOVE SEE AS921

The analysis comprised a description of the:

- pipe particulars as dimensions
- material specification and coating
- coating dimensions and specifications
- clamp details
- support particulars
- connection and integration in the module.

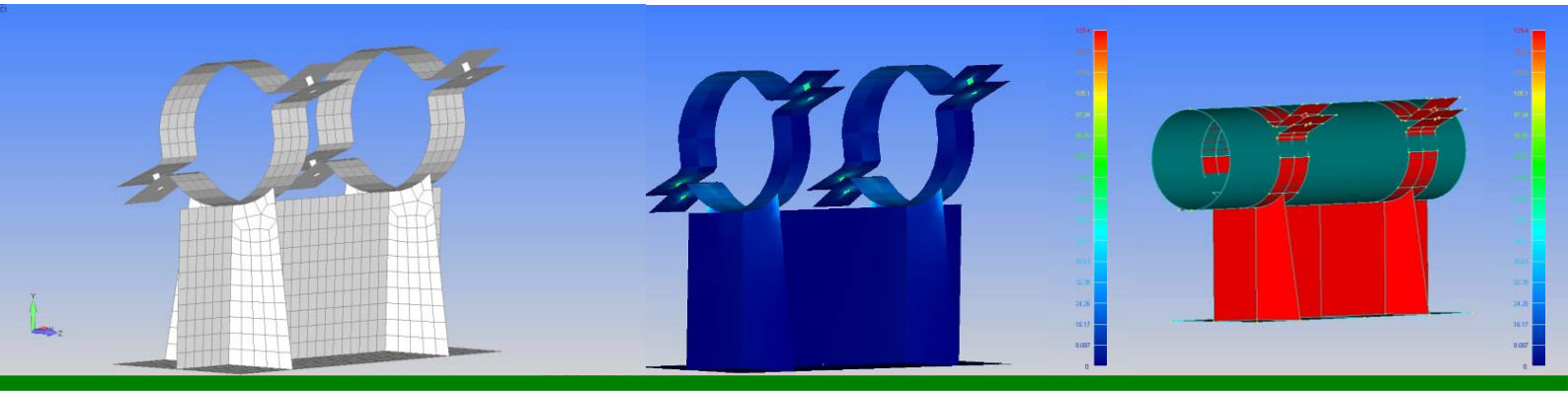

1.4 Sulphur Recovery Platform

HMC ref: 12506

Calculations were made for transportation of a 30 [m] height module and reflects the structural calculations of the module on board of a Multipurpose Heavy Lift Vessel.

The lashings and sea-fastenings have been verified with Finite Element calculations. The sea-fastenings were placed close to strong points of the structure and the lashings were placed trying to avoid the hotspots (points with a high concentration of stress).

Stoppers were welded on deck of the multipurpose heavy lift vessel, according to the drawing of the sea fastening plan.

Stoppers were calculated to withstand a horizontal force of 100 [t] and vertical of 25 [t].

A FEM model of the Module, sea fastenings and lashings was built.

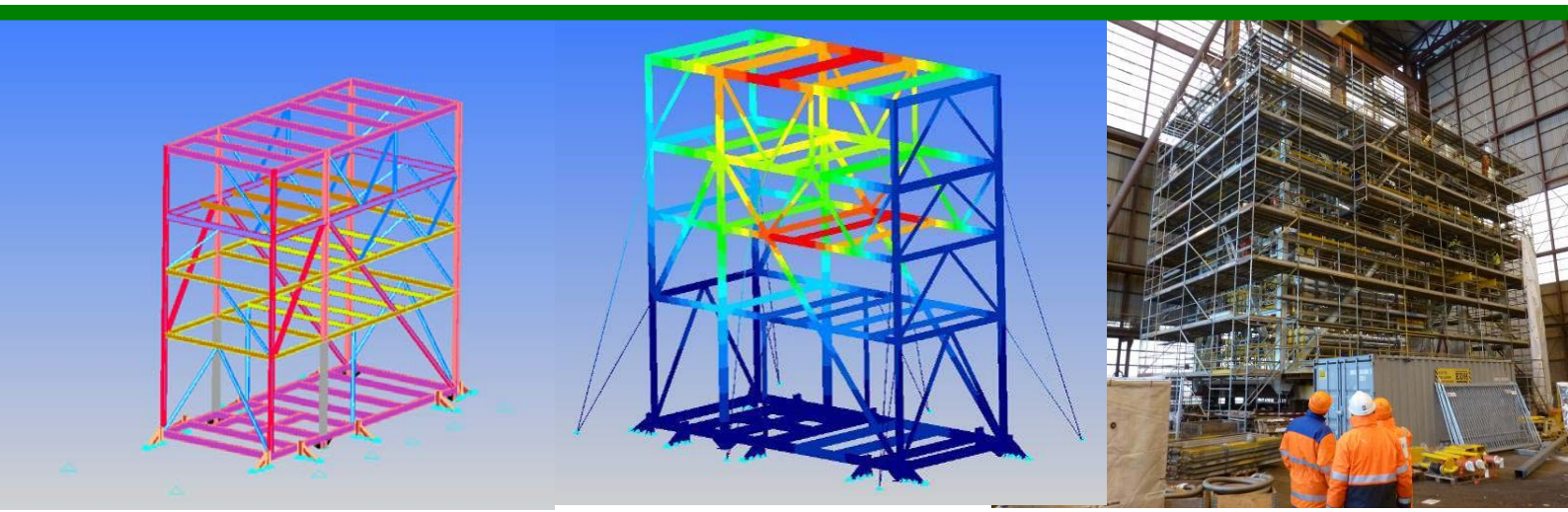

1.5 Two Mat Support Rigs on the semi submersible barge Badang (ex Ocean Orc)

HMC ref: 11642

Transportation of mat supported rig Seahawk 2504 and 2506 on high cribbing on board of the semi-submersible barge KPV Badang. Seahawk 2504 and 2506 were loaded in Freeport, Unites States of America. The cargo's destination was Lumut, Malaysia via Cape of Good Hope.

High cribbing was required because of the 2' skirt under the bottom of the rigs. The cargo was supported by cribbing of 0.90 [m] high, therefore special attention to the brackets of the cribbing wood was needed.

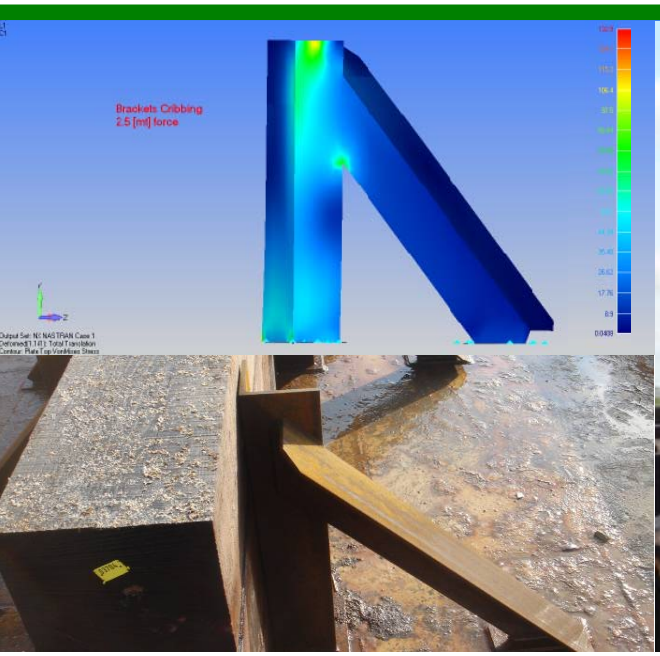

For each sea fastening the capacity was determined in the direction of the Extreme Design Forces. So the longitudinal 'capacity' component as well as the transverse 'capacity' component were determined using the angle of the sea fastening.

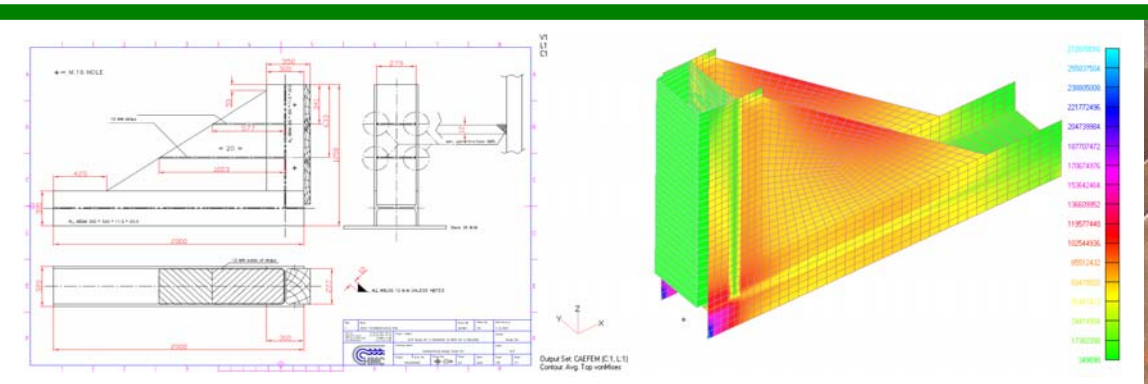

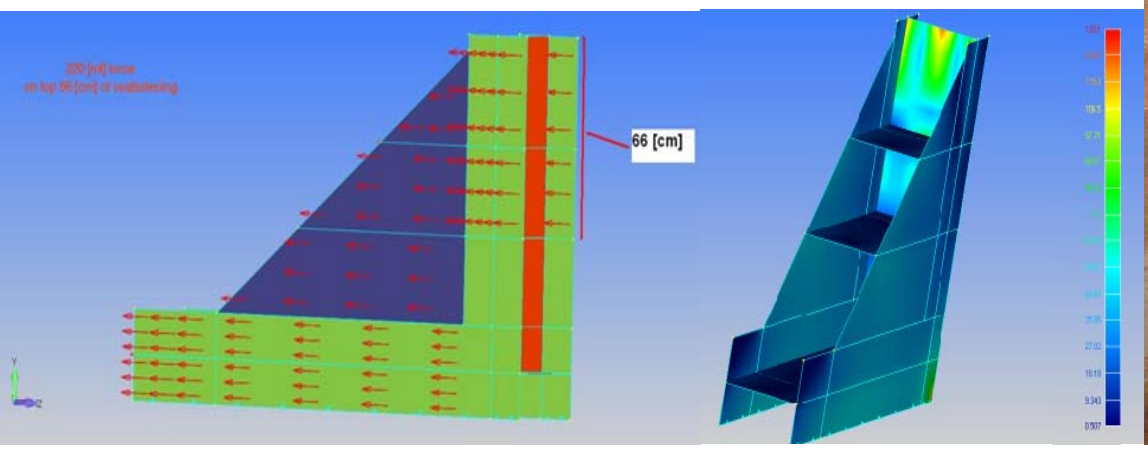

1.6 Construction supervision, transportation of a Mobile Offshre Application Barge (MOAB)

HMC ref: 12517

The workscope was to design towing point for the transport and installation of a Mobile Offshore Application Barge (MOAB) for wind turbine park in Germany.

In order to reduce the stress below limits, one adjustment was made to the suction can. A plate of 20 [mm] thick was placed on the outer shell of the suction can.

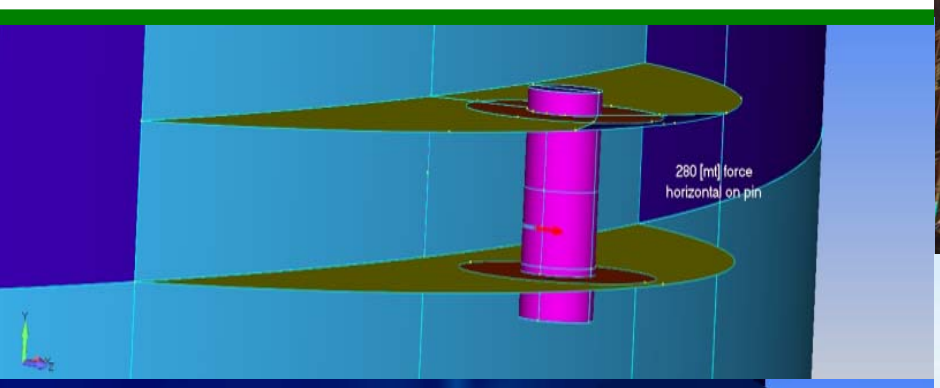

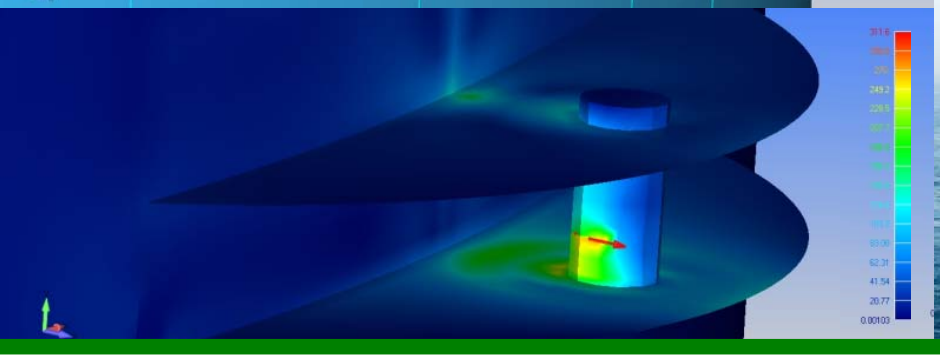

1.7 Gavea Lifter Perigrini I

HMC ref: 09542

During operations, a line-handling boat was used to pass a semi submersible heavy transport barge mooring ropes to the rig. The line-handling boat was supplied and manned by the yard and followed instructions of the superintendent. These lines had to be attached to the barge, therefore a bollards had to be installed.

To analysis the capabilities of the bollards HMC used FEMAP with Nastran to determine the strength of the bollards and solve the finite element analyses.

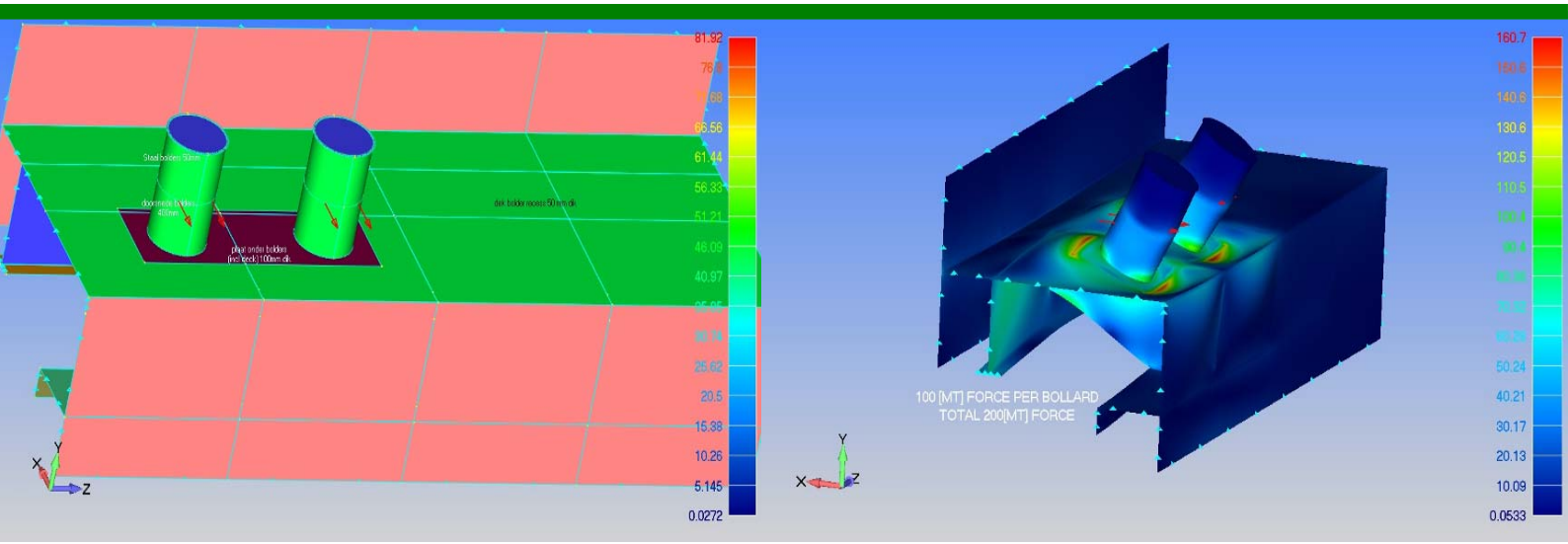

1.8 Submersible drilling rig converted into a Mobile Offshore Production Unit (MOPU)

HMC ref: 12549

A submersible mobile offshore drilling unit (MODU) was converted intto a Mobile Offshore Production Unit (MOPU). HMC was asked to analyze the strength of several parts of the unit, and to proof the life time in accordance with ABS rules/

The strength of the caisson aft starboard structure supporting the flare boom.

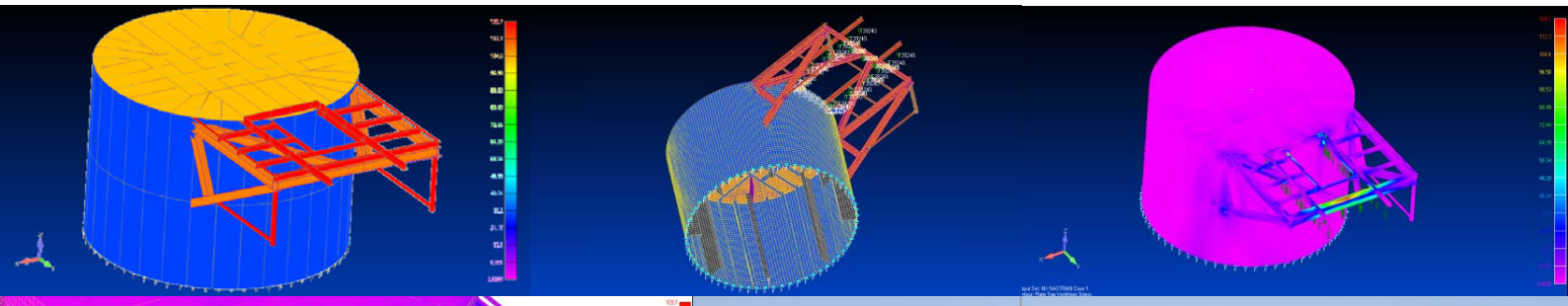

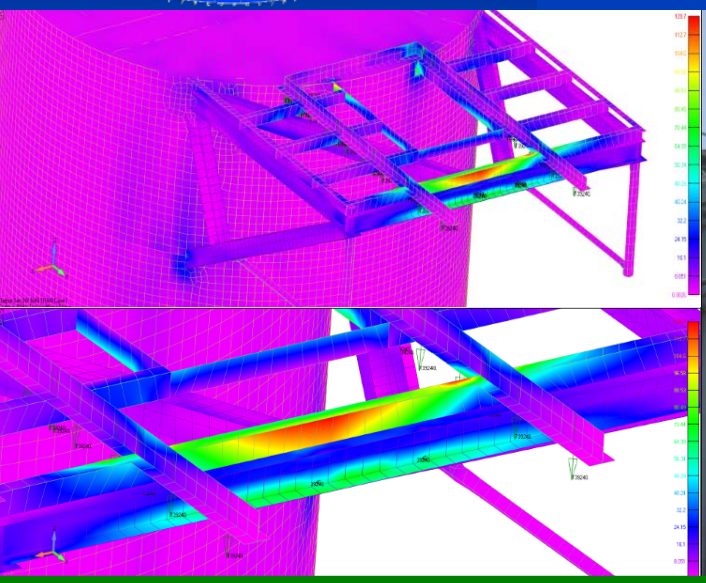

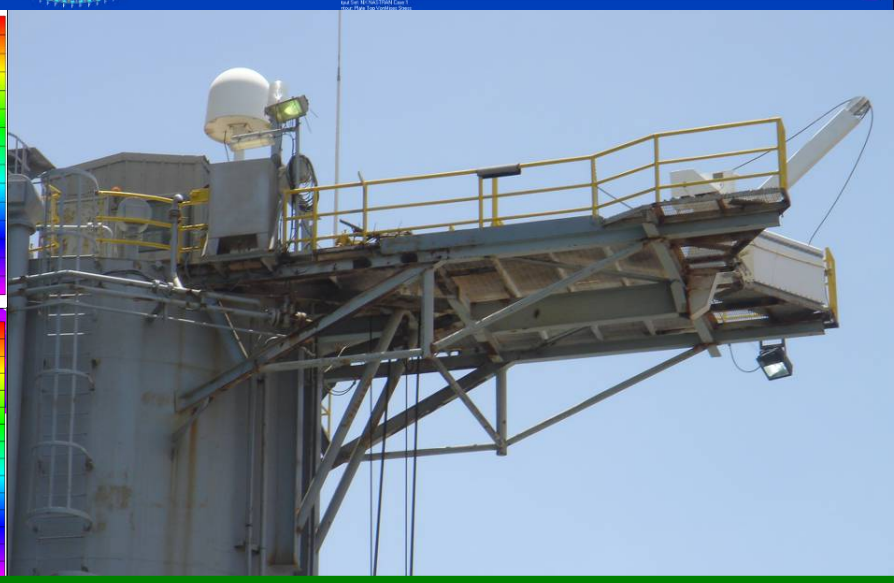

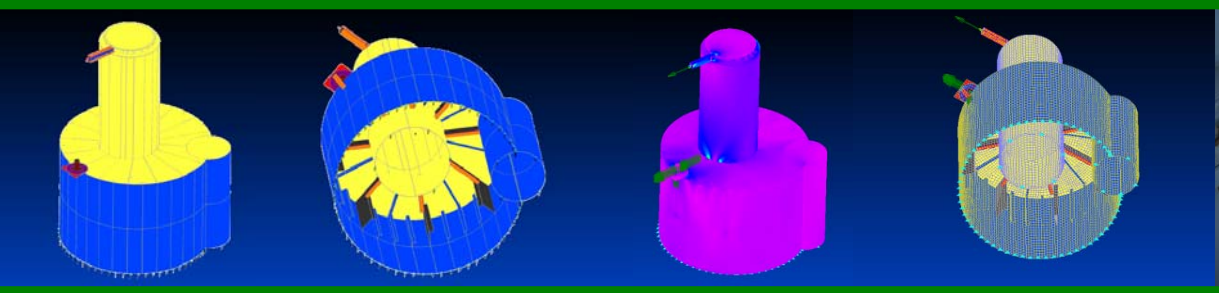

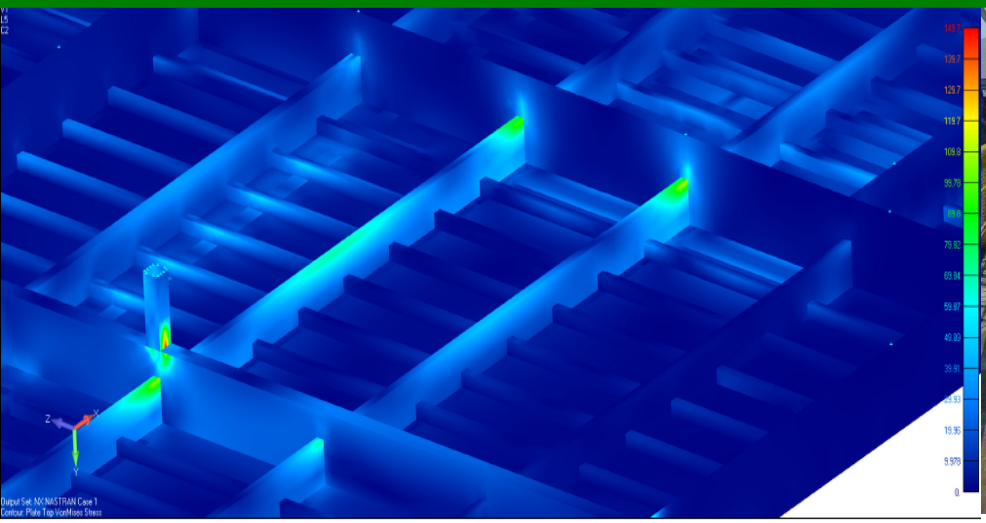

1.9 Calculation for transport on Jumbos Fairlift

HMC ref: 12586

Calculation of the tower transport frame for the transportation of windmill sections.

In the FEM model, extra H-beams and plates were inserted to give the frame extra strength. Also three large sea fastenings were placed in transverse direction for extra distribution of the forces. On the diagonal beams, an extra plate of 20 [mm] thick was placed between the bolts

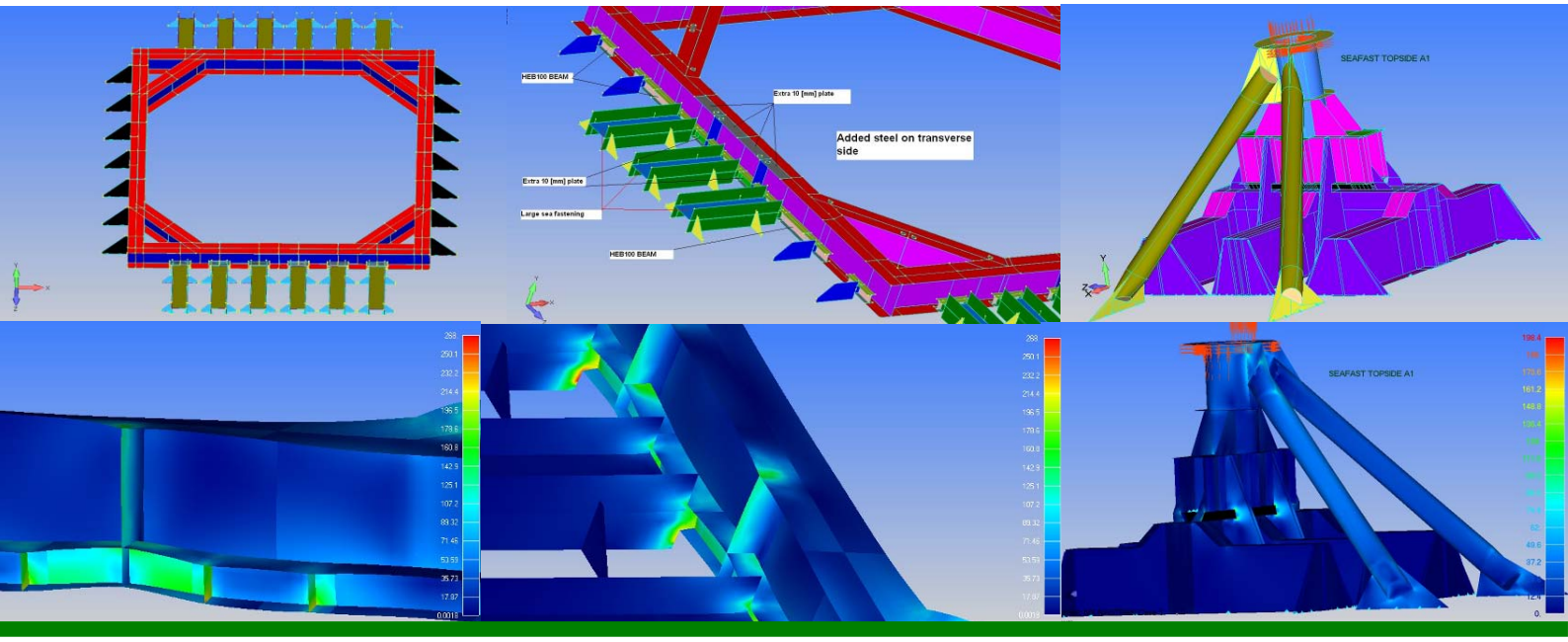

1.10 Four type brackets for transport of modules from Abu Dhabi to Escravos

HMC ref: 12500

Transportation of modules on board a semi submersible heavy transport vessel.

A FEM model was made to check the design of sea fastening. For this transport four type brackets were used, bracket A (E) and B to withstand the transverse forces and bracket C and D to withstand longitudinal forces. Forces were determined with motion response calculations in house developed MS-Tool.

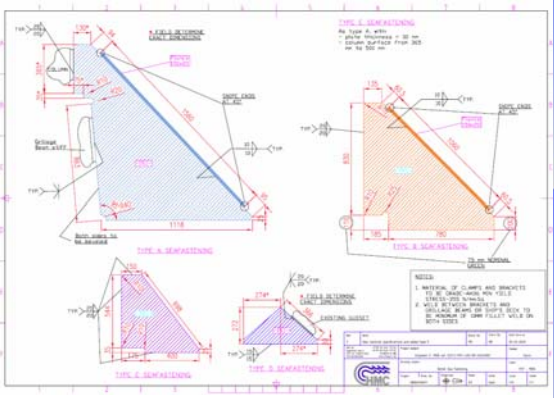

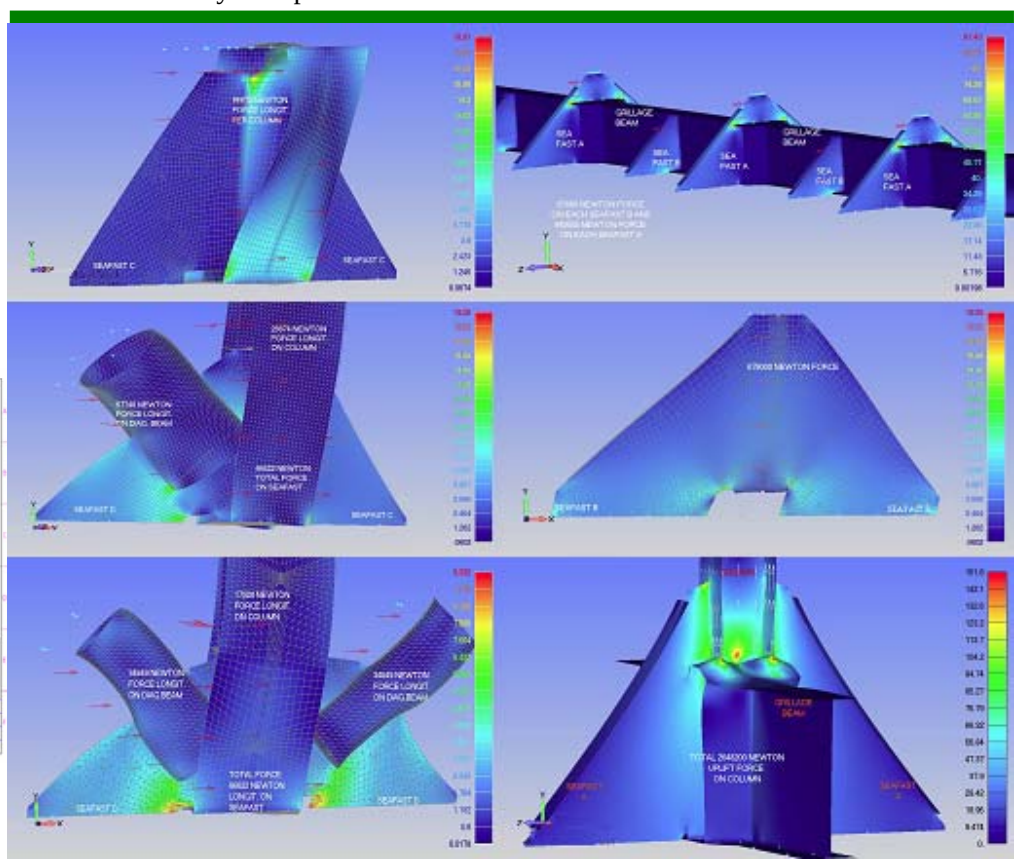

1.11 Modules transportation, seafastening calculations

HMC ref: 12500

Transportation of modules on board a semi submersible heavy transport vessel.

For each sea fastening is determined the capacity it has in the direction of the Extreme Design Forces.

A FEM model was made to check the design of seafastening.

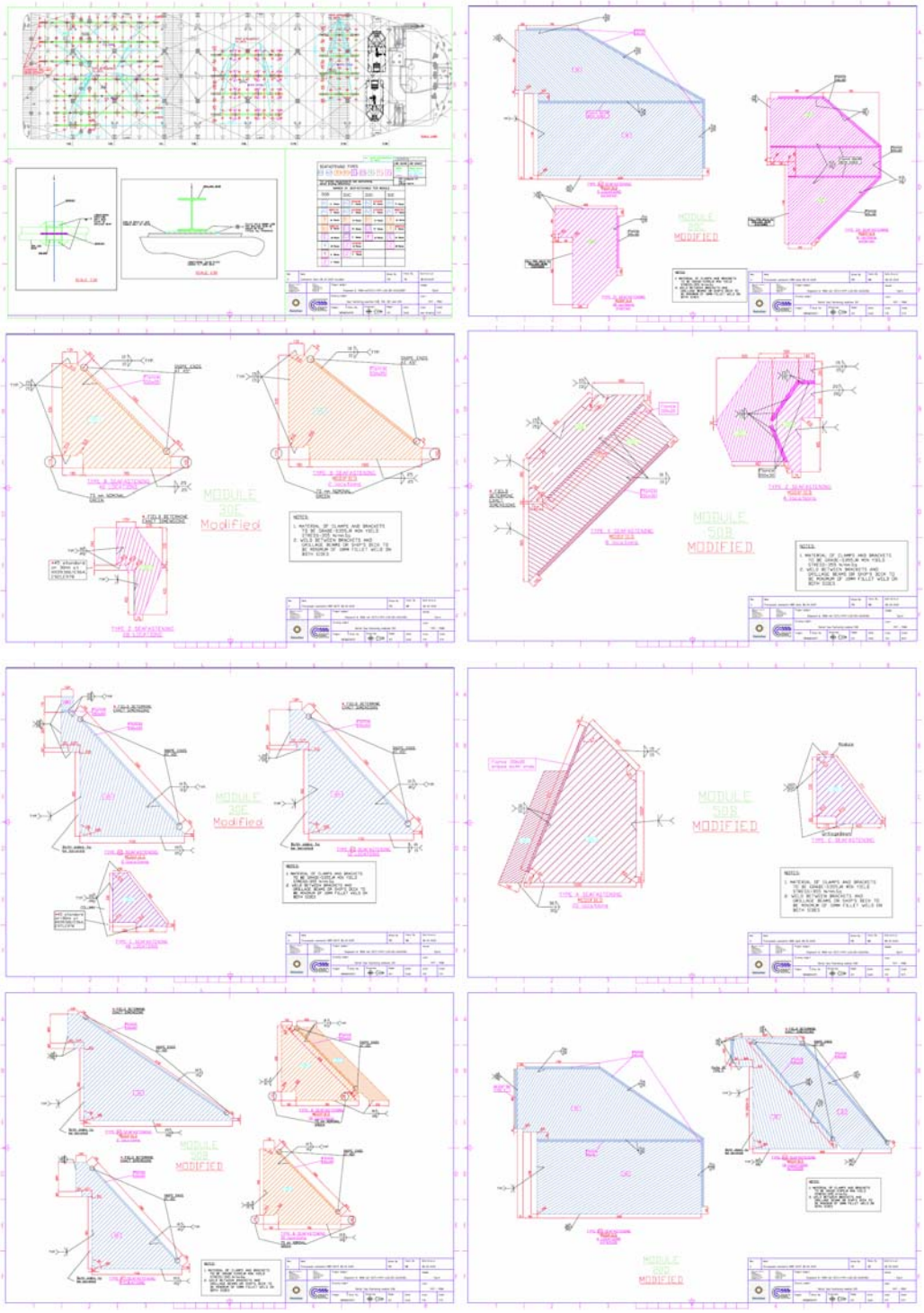

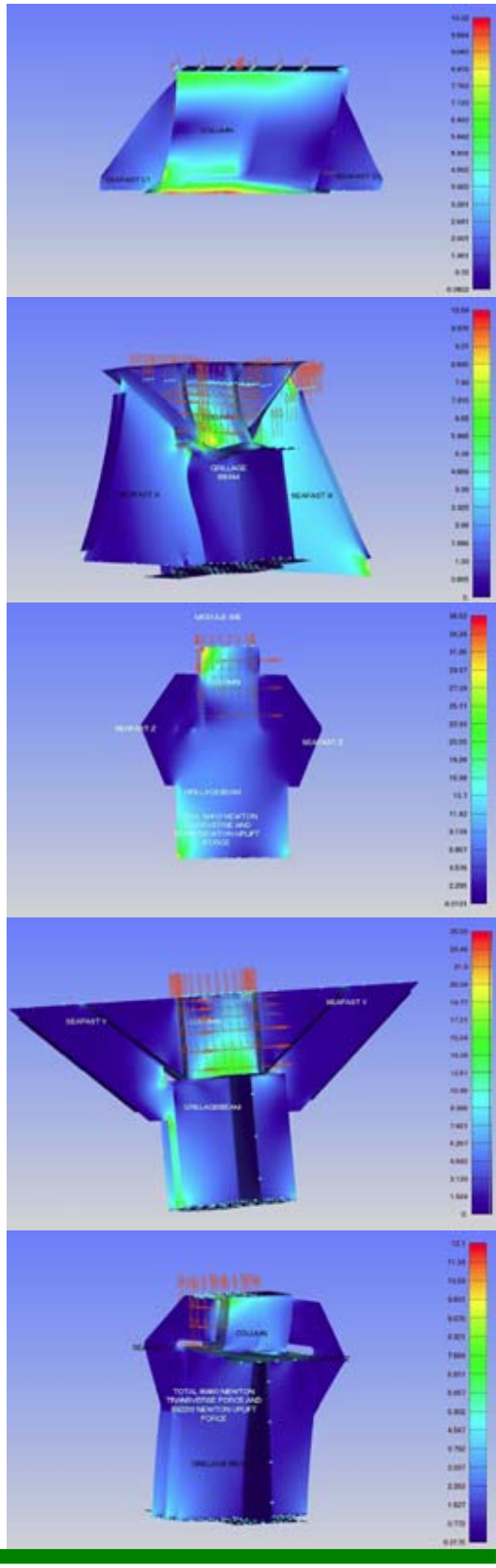

1.12 Transport engineering submersible rig

HMC ref: 12533

Buckling check of a MOPU onto a semisubmersible vessel in heavy seas on a route passing Cape of Good Hope, FEM calculations were made to check the buckling strength of the bracings and to determine the structural integrity for the transport.

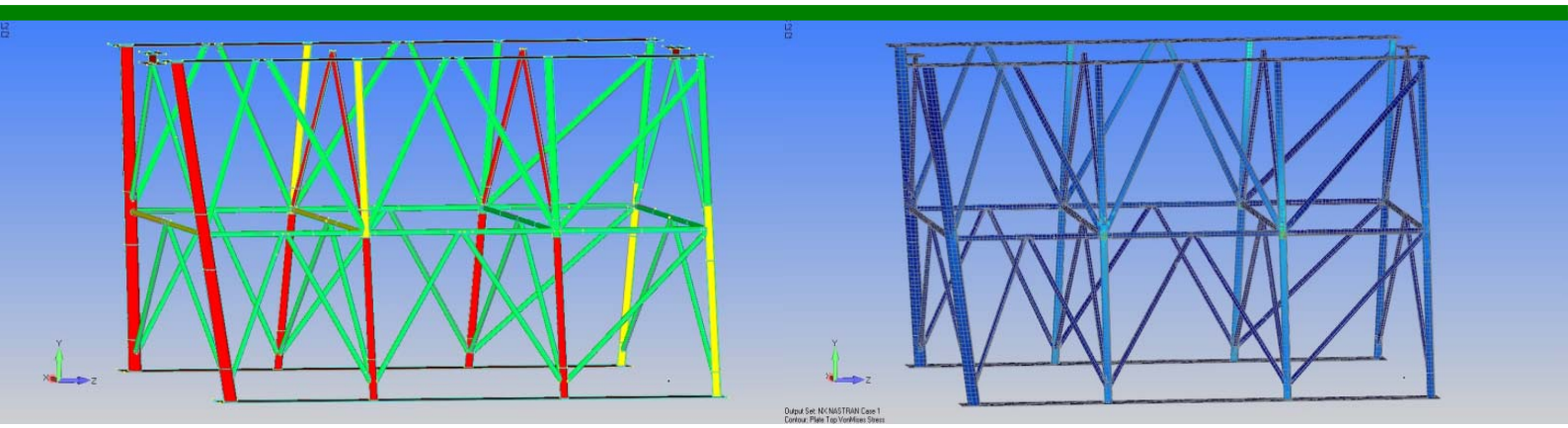

1.13 Rig geometries and FEM model

HMC ref: 08616

A MOPU rig was modelled in FEMAP to perform fatigue analysis. The rig showed the most problems in the bulkheads and legs. After analysis the conclusion was that bulkheads and connection leg-jack had to be reinforced. Also the elasticity of the seabed was taken into account.

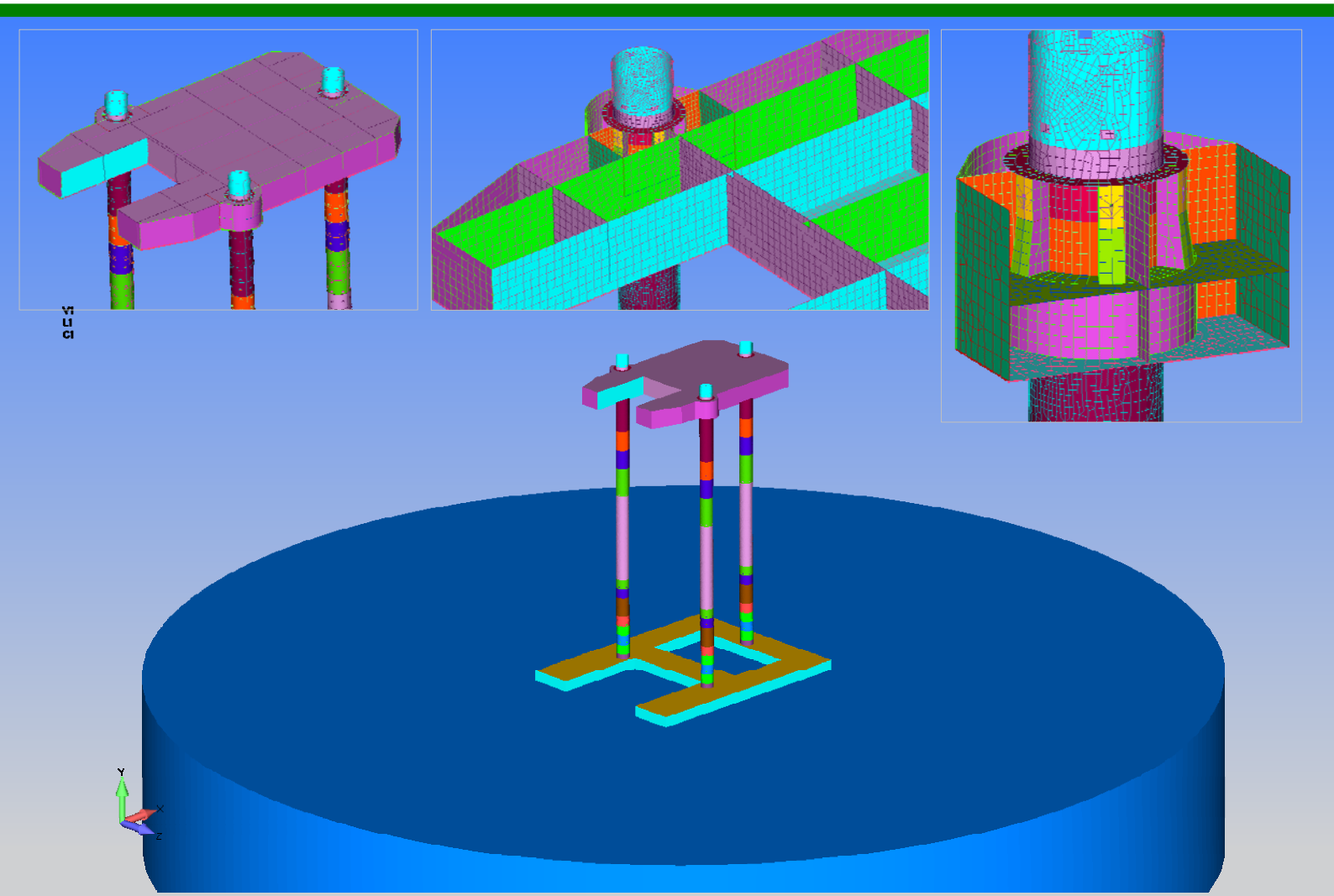

1.14 Strength analysis mobile offshore unit including fatigue analyses for lifetime assesment

HMC ref: 12500

A submersible Mobile Offshore Drilling Unit (MODU) was undergoing major modifications for conversion to a Mobile Offshore Production Unit (MOPU) for service in the oilfields in Thailand. HMC was asked to analyze the strength of the A-frame structure at the caisson forward starboard supporting the hoses equipment.

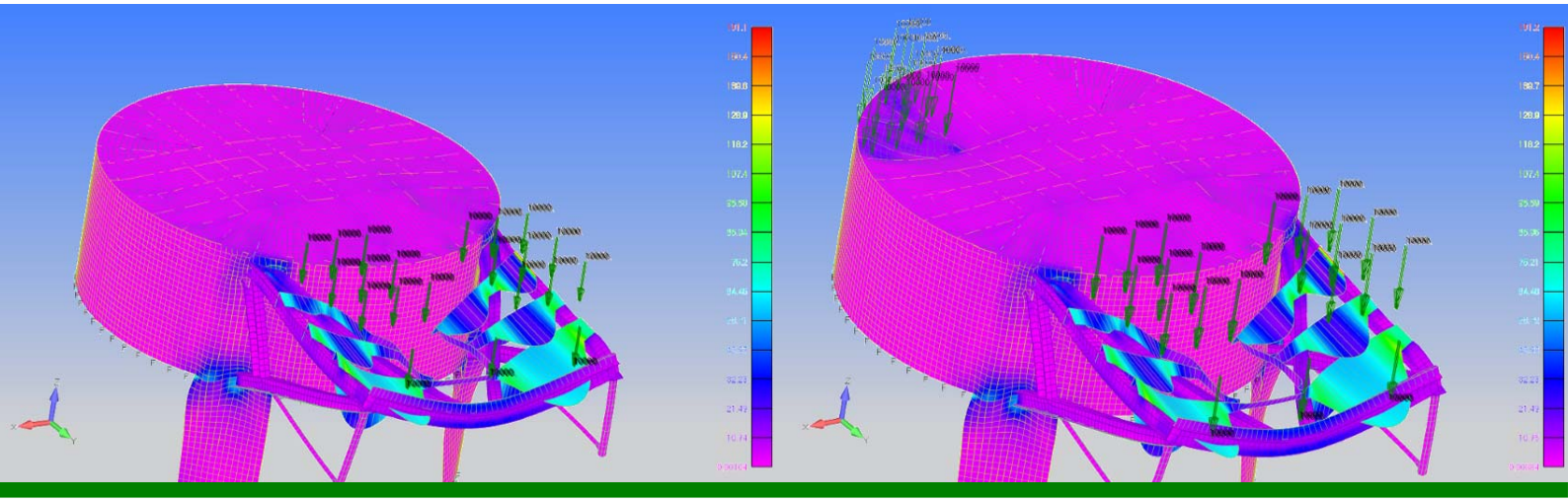

1.15 Seafastenings designed for Jacket transportation including fatigue analyses

HMC ref: 08583

These seafastenings were designed for the transportation of a Jacket.
After running Motion Response Calculations, the generated data was used in a Finite Element Analysis (FEMAP).
Conclusion was that the seafastening as given by client for this voyage was not sufficient. After making relative simple modifications, the seafastenings were considered to be sufficient.

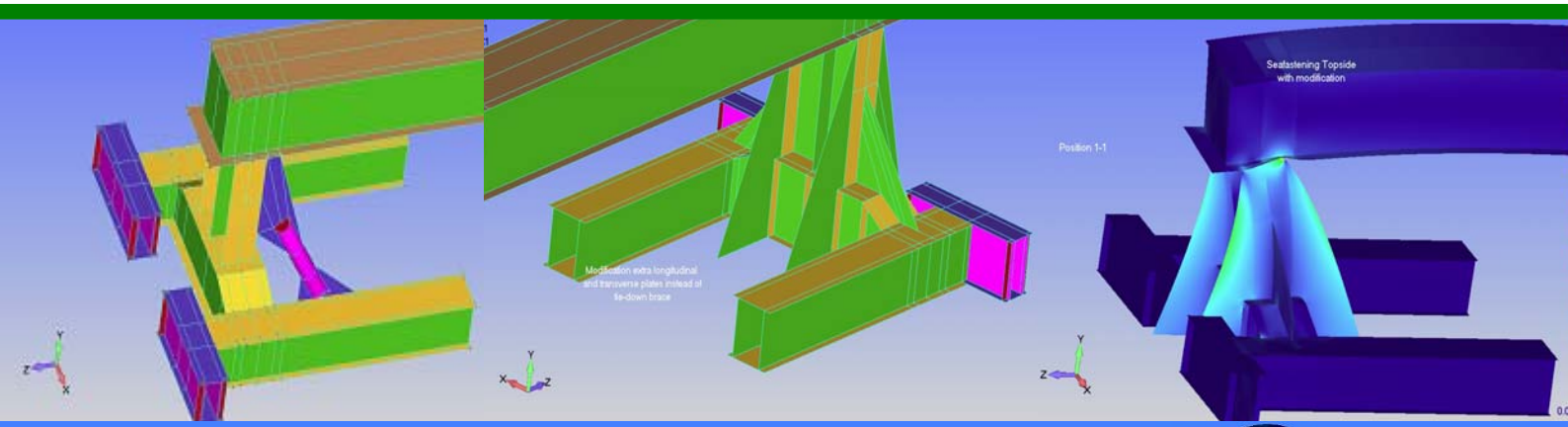

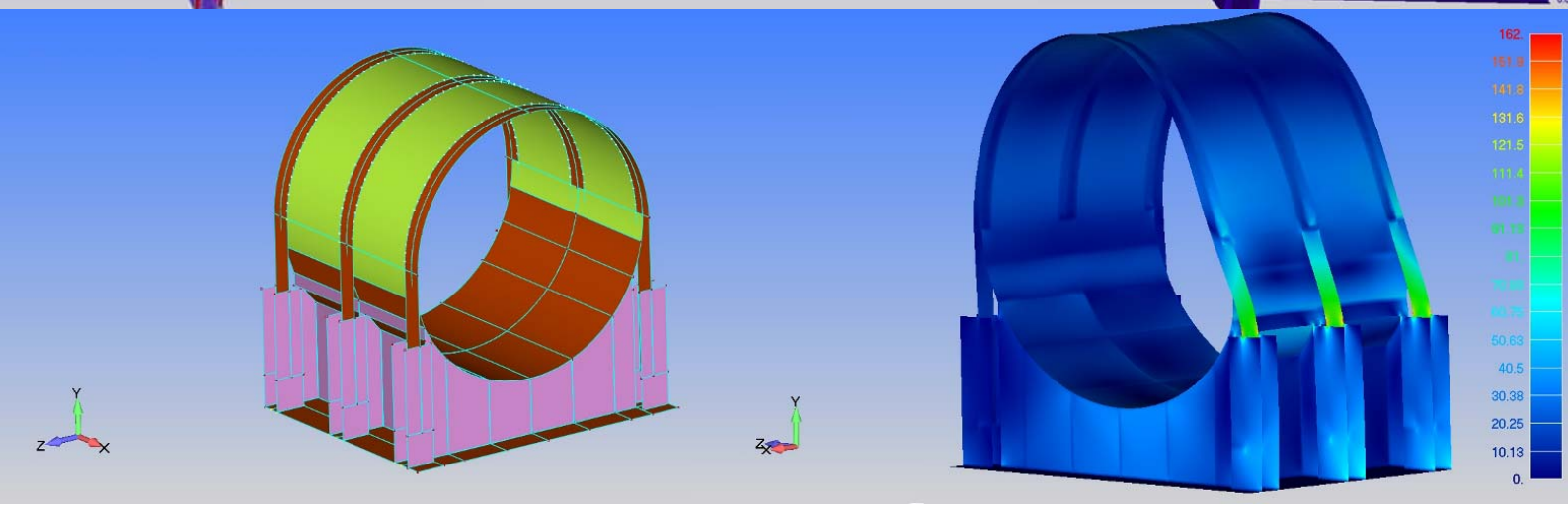

1.16 FHT 0012C Voyage 6 Fjord 20D, 20C, 30E, 50B, Abu Dhabi to Escravos

HMC ref: 08566

FEMAP models have been made to check the KBR design of seafastenings. Forces have been determined according column reaction forces report provided by KBR. As all reaction forces provided by KBR are higher than calculated with MS-Tool, the highest one has been chosen to be contingent.

To make calculations as accurate as possible HMC makes FEM models exactly according the construction drawing.

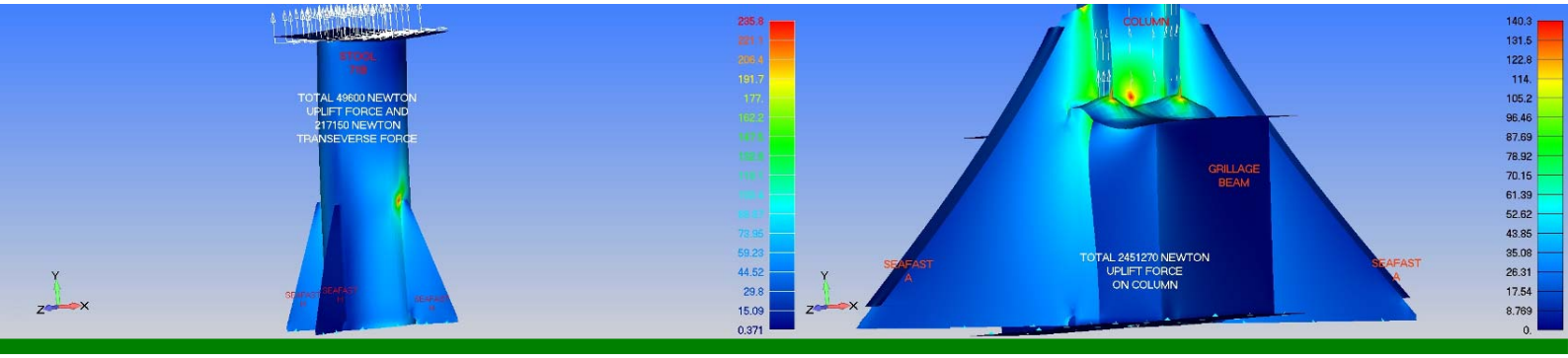

1.17 Transportation of modules, sea fastening built in FEMAP including fatigue analyses

HMC ref: 07632

HMC compiled transport engineering of the Pazflor Modules on board a semi submersible heavy transport vessel. The modules were loaded at Lobito by means of lift-on. The cargo's destination was Okpo. Finite element calculations were made and used to optimize and avoid fatigue damage to the sea fastening.

FEM models have been made to check the design of sea fastening. Forces have been determined with motion response calculations and are maximum 4 [mt] per seafast. Therefore HMC made calculations with 10 [mt] force for seafast 1,1A,4B and 4C, and with 5 [mt] for seafast 4 in the FE program. Of each type of sea fastenings the mesh model and the result with load were given.

For this transport two types of seafastening were used, type 1 for the pipe racks and type 3 for the helideck. Forces have been determined with motion response calculations.

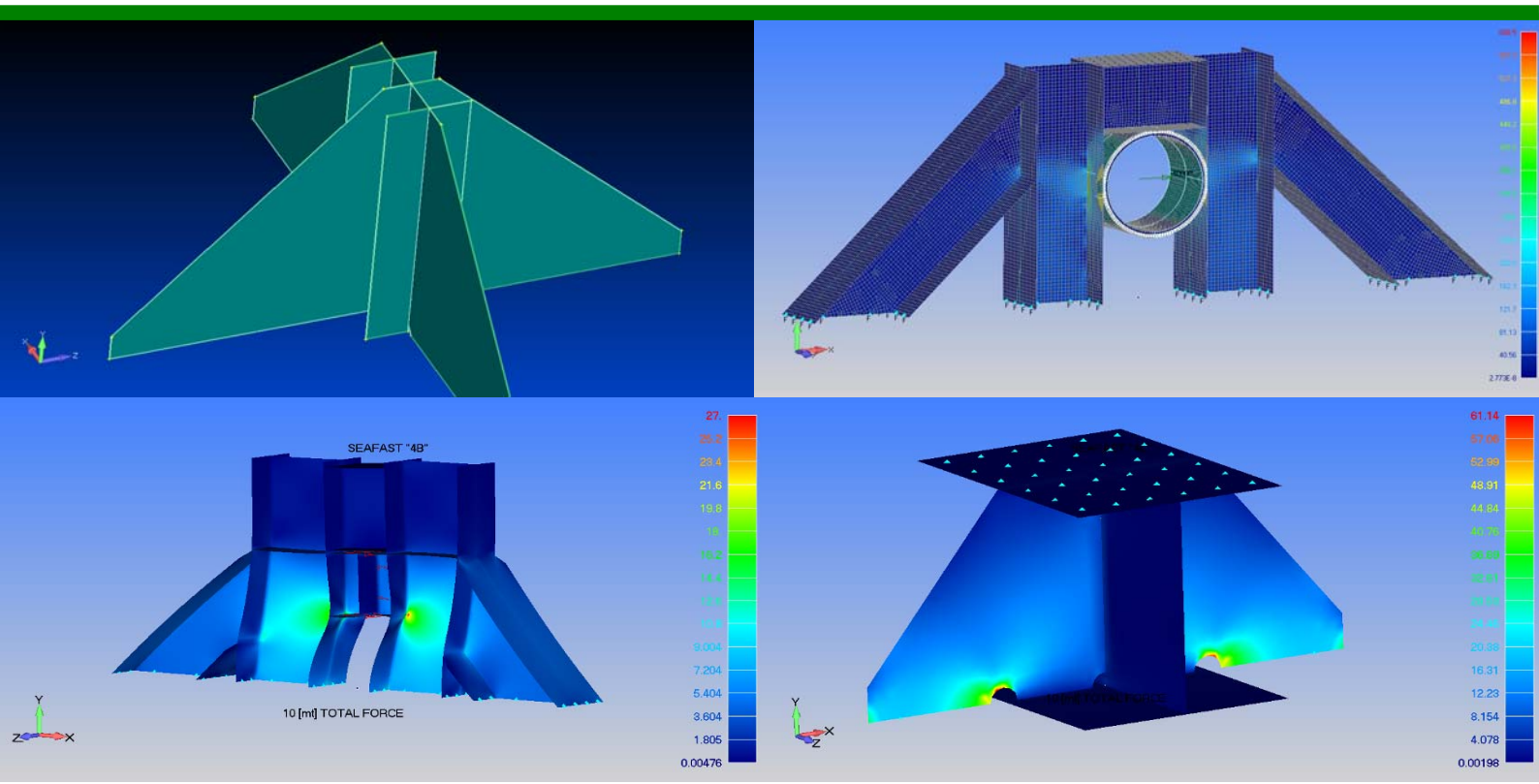

1.18 Transportation of drilling rig

HMC ref: 12532

A drilling rig had to be transported from Instanbul, where it has prepared, to its destination in the black see. HMC made calculations using a FEM model of the rig.

FEMAP was used for pre- and post processing finite element analysis of the structure. The workscope was to design towing point for the transport.

After calculations were made the towing of the drilling rig would de most efficient when towed by 5 tugs(s).

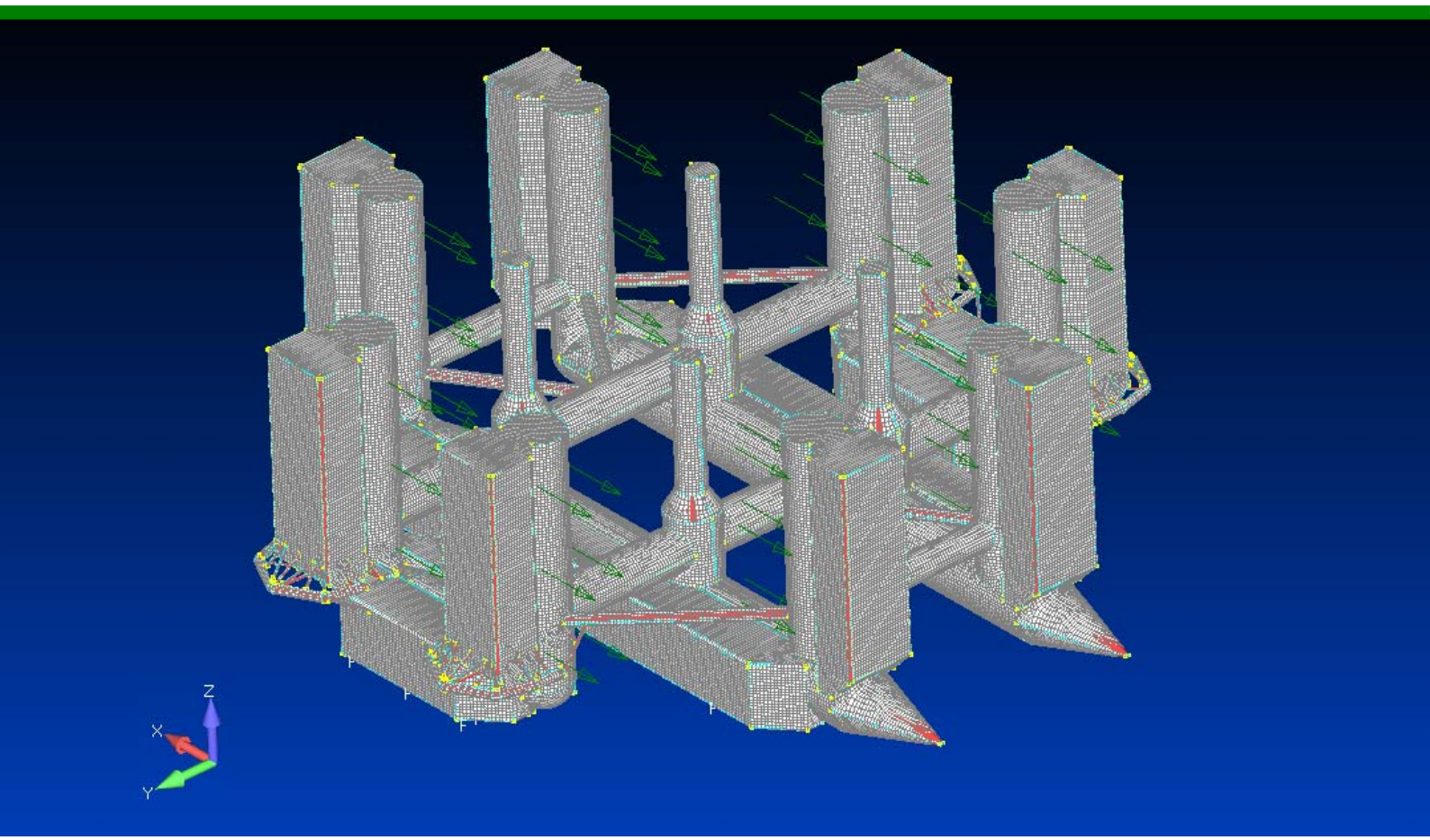

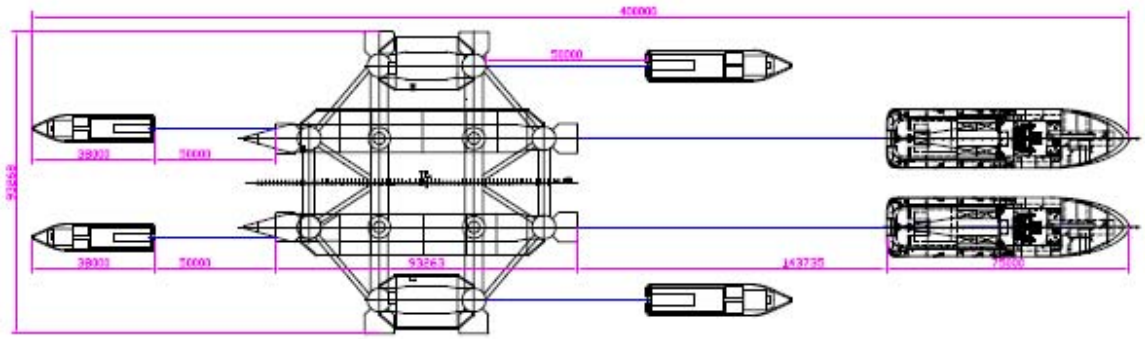

1.19 TPI Model tests for Mega Trust for Gorgon

HMC ref: 11586

HMC performed model tests for the Mega Trust, these tests were executed at and und the supervision of Delft University of Technology (TUD). HMC configured a FEM model for the construction of the model.
The model tests were afterwards used to perform fatigue analysis whit the FEM model.

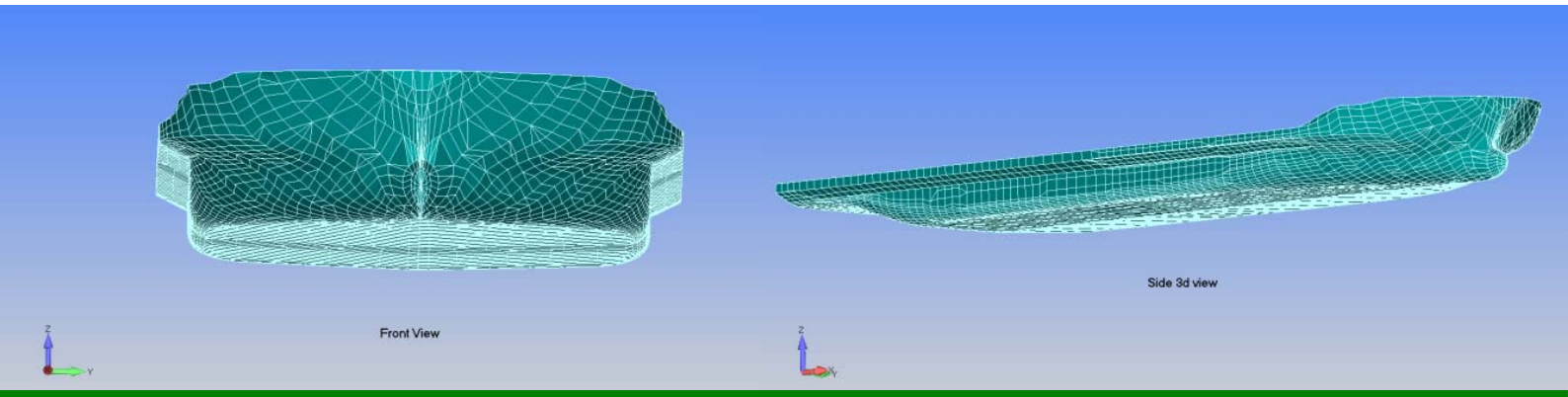

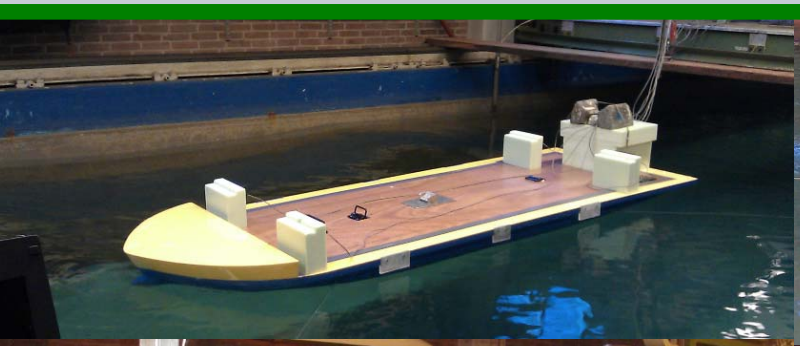

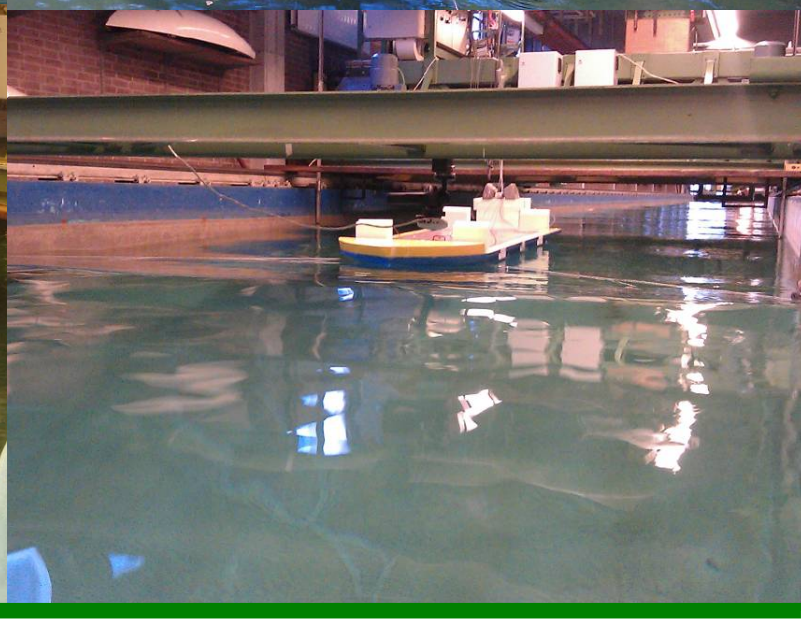

Hydrographic and Marine Consultants BV
Operetteweg 4
1323 VA Almere, The Netherlands
Tel.: +31 (0) 36 5464775, Fax: +31 (0) 36 5464777
E-mail info@hmc.nl, website www.hmc.nl